HAGS®

Installation Instructions

Hofors Furniture

V-OFBENCH / V-OFSEAT / V-OFPICNIC

Hofors Bench / Hofors Park Bench / Hofors Picnic Table



© Playpower inc
hags@hags.com
www.hags.com

ITEM	REF	PART	V-OFBENCH	V-OFSEAT	V-OFPICNIC	Kg
1	27103005	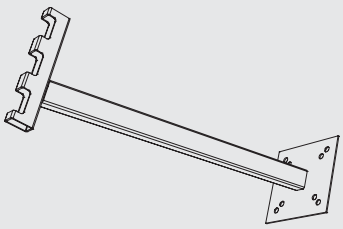	2			5
2	27103006	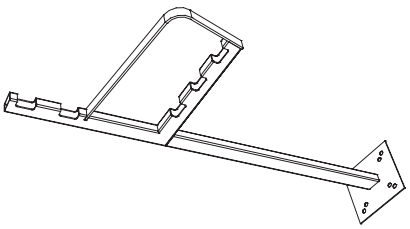		2		8
3	27103007	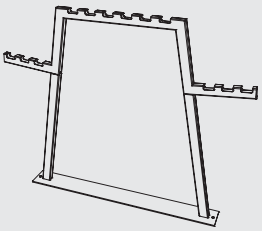			2	18.5
4	27103008	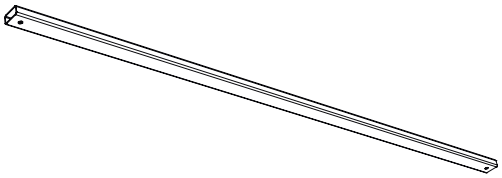	3	5	12	7.75
5	10121050	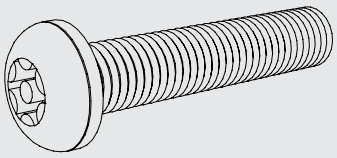	6	10	24	0.035
6	10291000	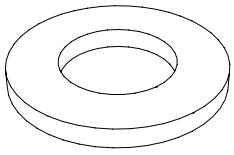	6	10	24	0.01
7	10121000	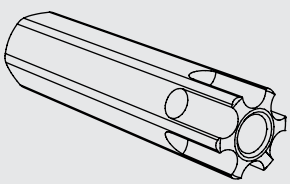	1	1	1	0.05

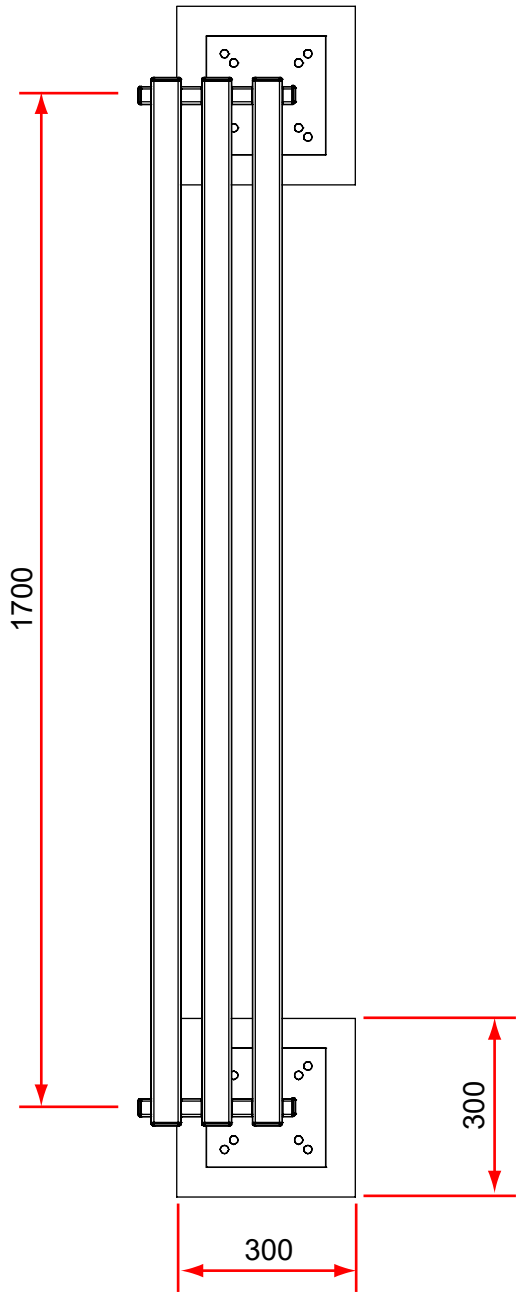

S15

L x W x H (m)

1.76 x 0.27 x 0.42

S12

kg

34

S13

m³

0.054

S14

m²

5 x 5

S20

2 X 2

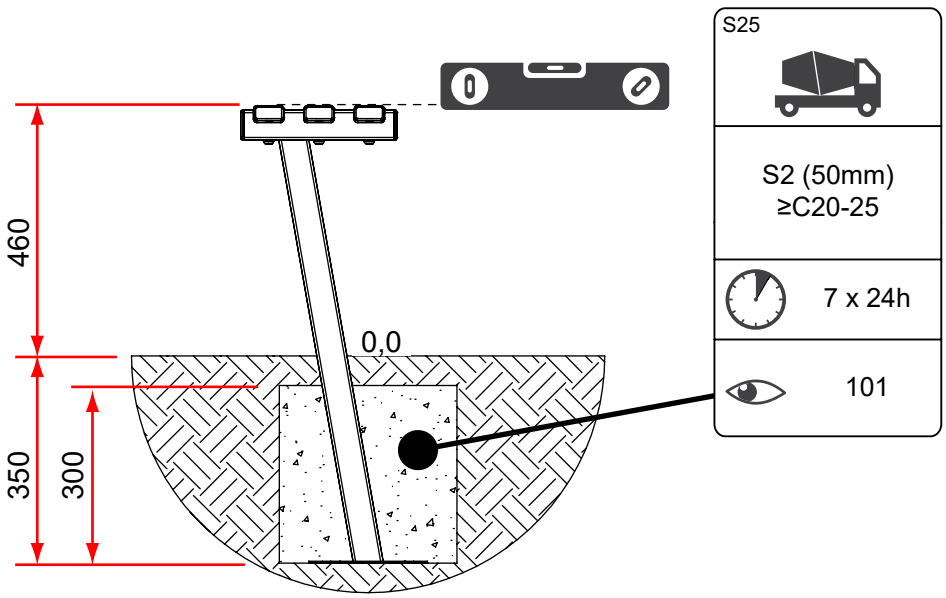

S25

S2 (50mm)
≥C20-25

7 x 24h

101

Hofors Bench
V-OFBENCH

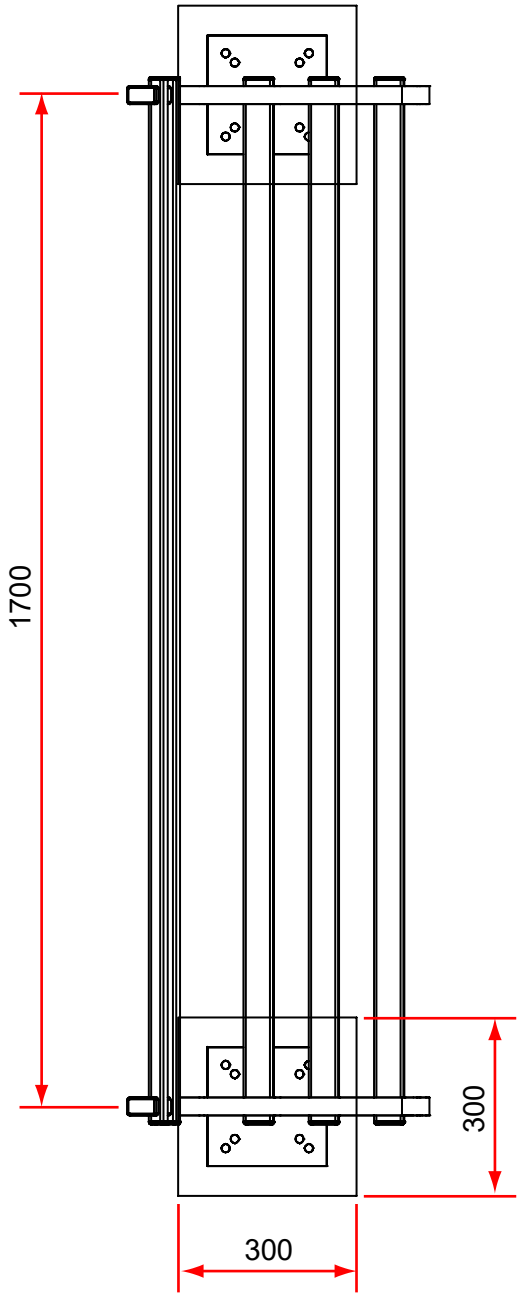

S15

L x W x H (m)

1.76 x 0.51 x 0.85

S12

kg

55

S13

m³

0.054

S14

m²

5 x 5

S20

2 X 2

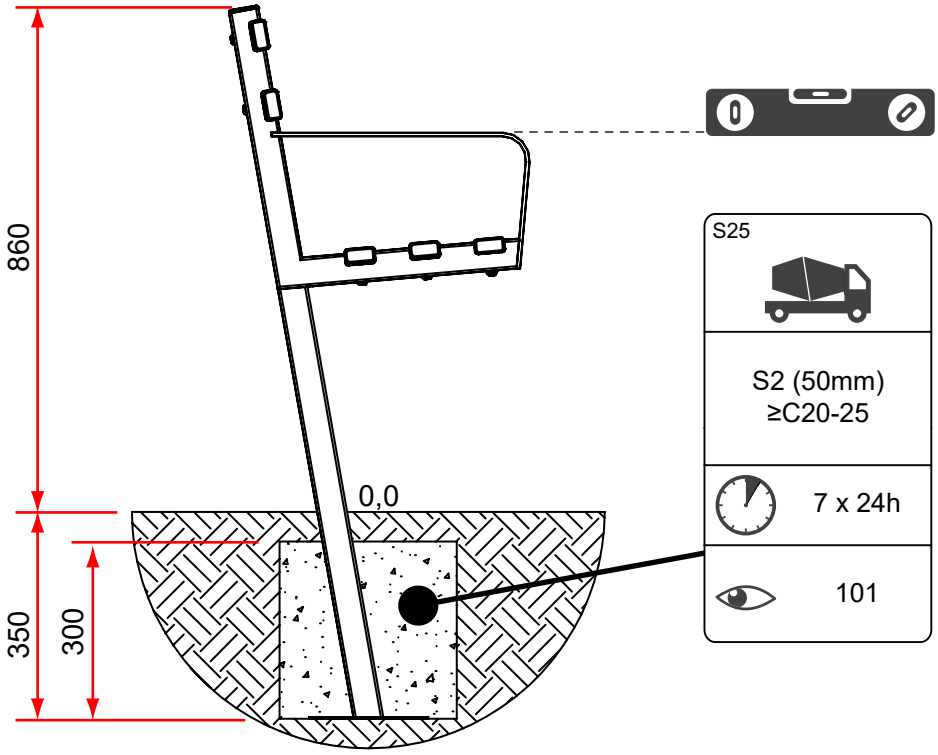

S25

S2 (50mm)
≥C20-25

7 x 24h

101

Hofors Park Bench
V-OFSEAT

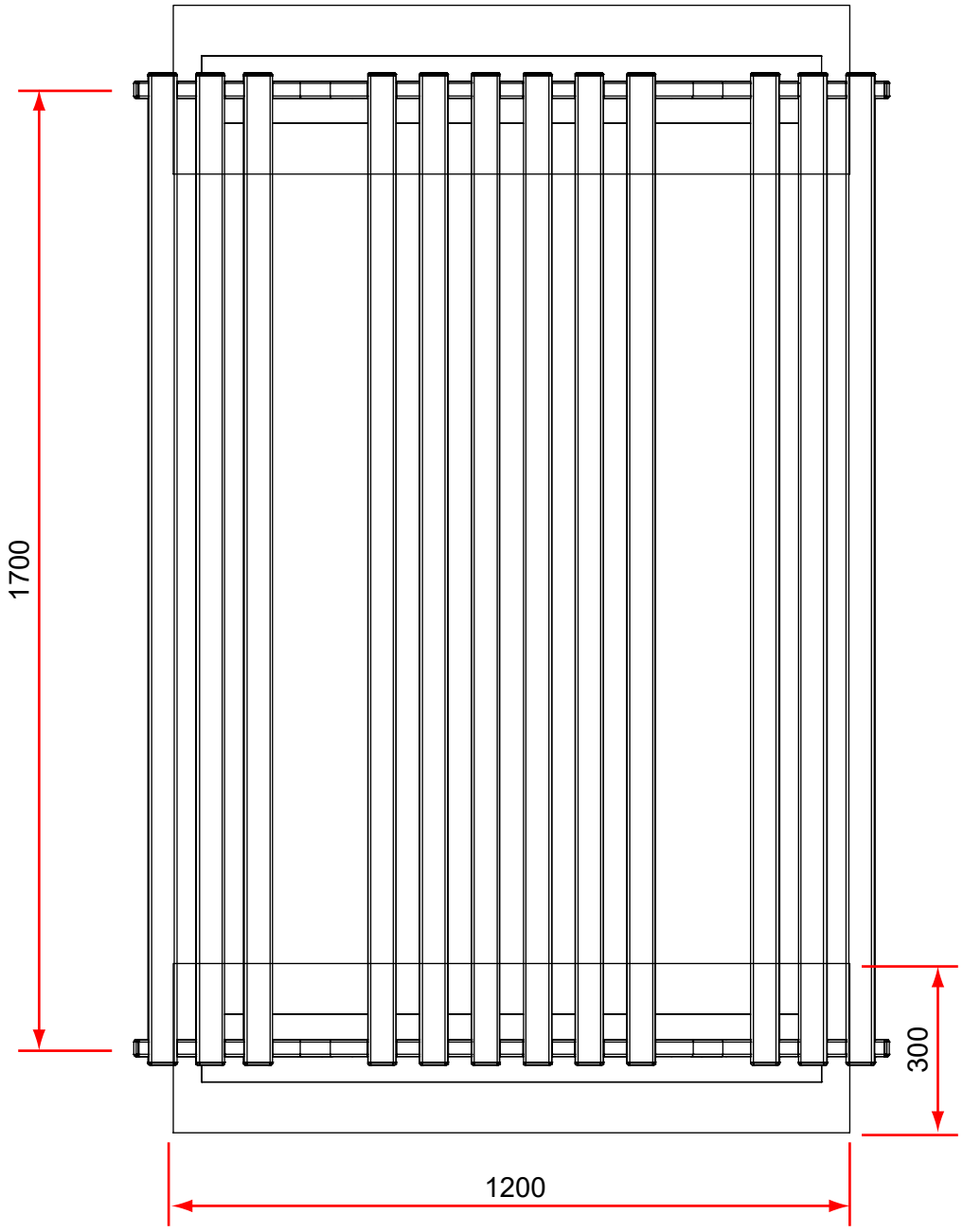

S15

L x W x H (m)

1.76 x 1.34 x 0.71

S12

kg

131

S13

m³

0.022

S14

m²

5 x 5

S20

2 X 2

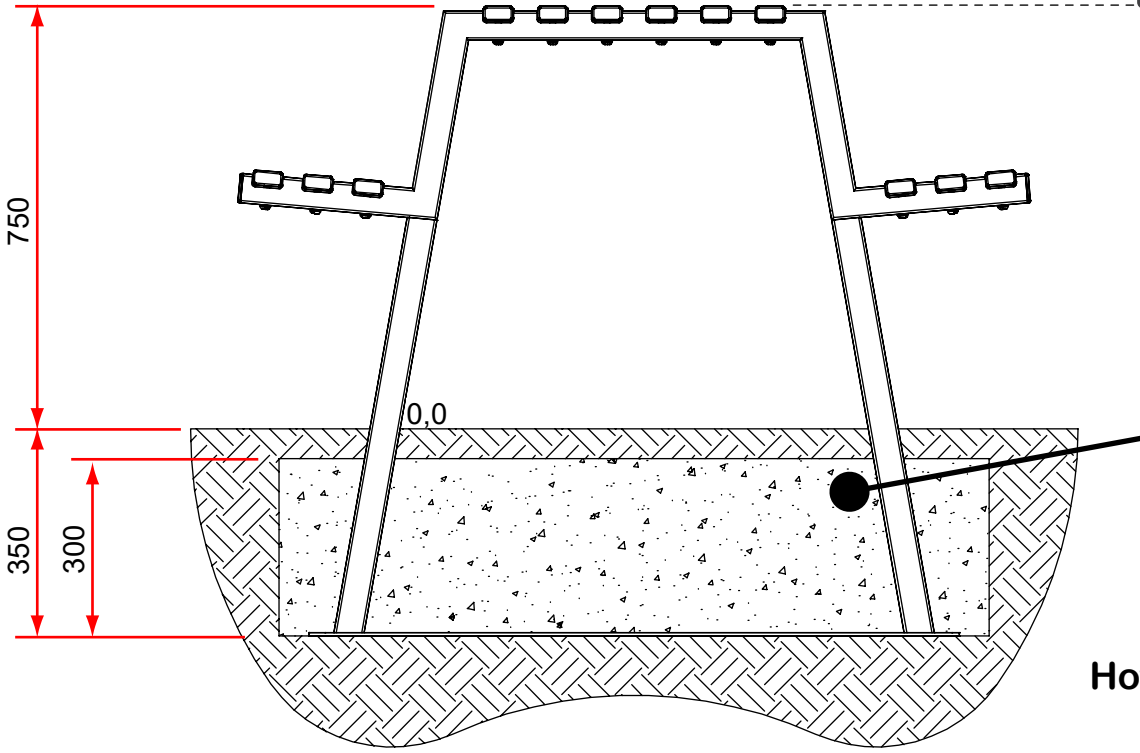

S25

S2 (50mm)
≥C20-25

7 x 24h

101

Hofors Picnic Table
V-OFPICNIC

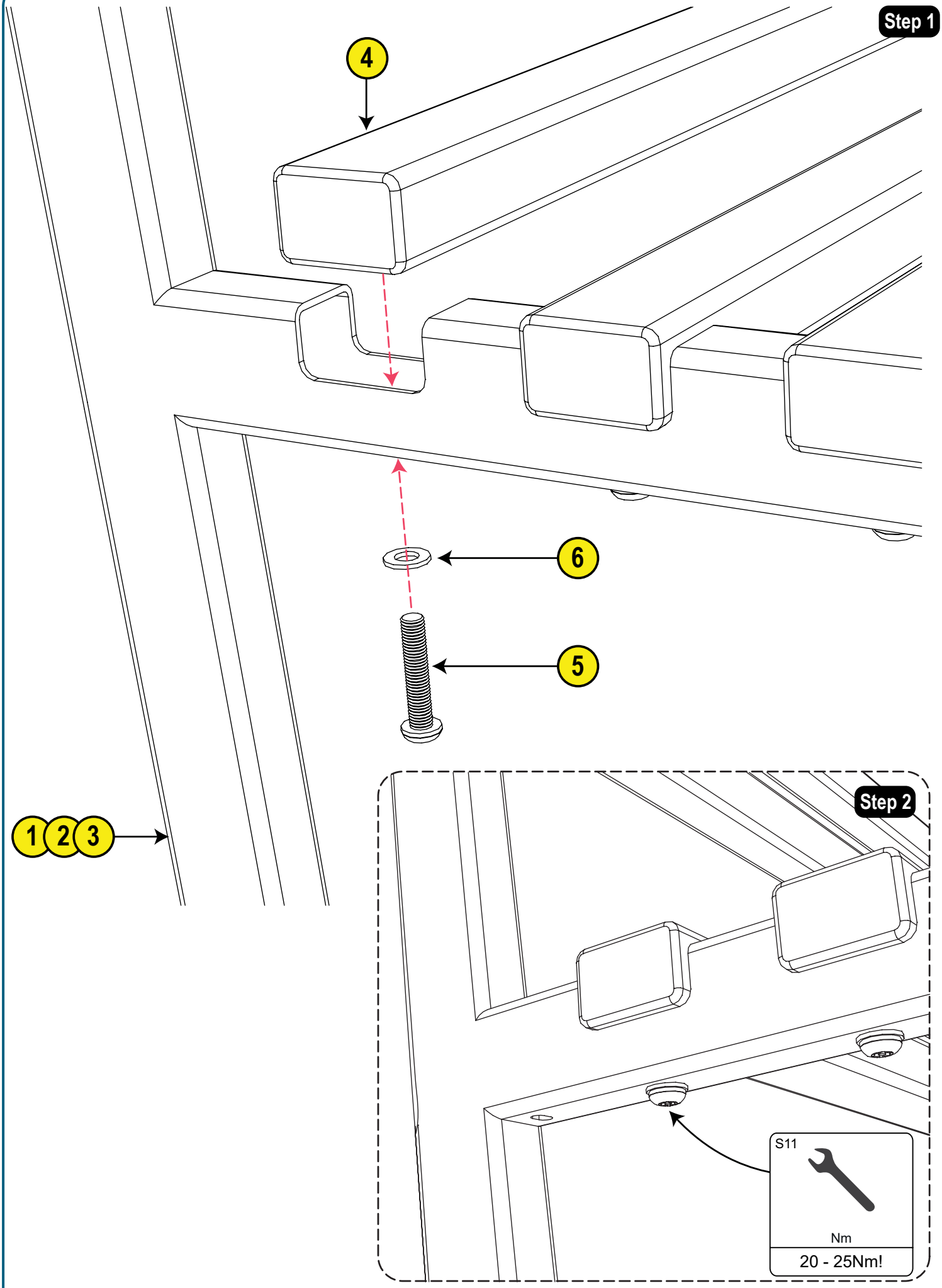
Step 1
4
6
5
1
2
3
Step 2
S11
Nm
20 - 25Nm!